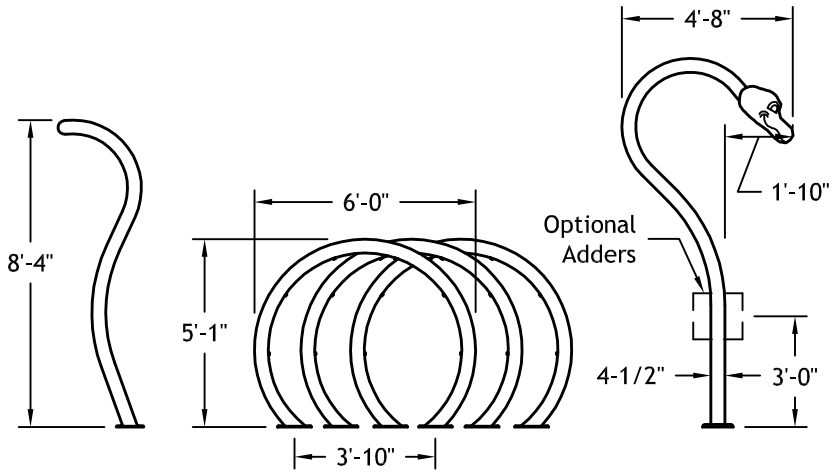

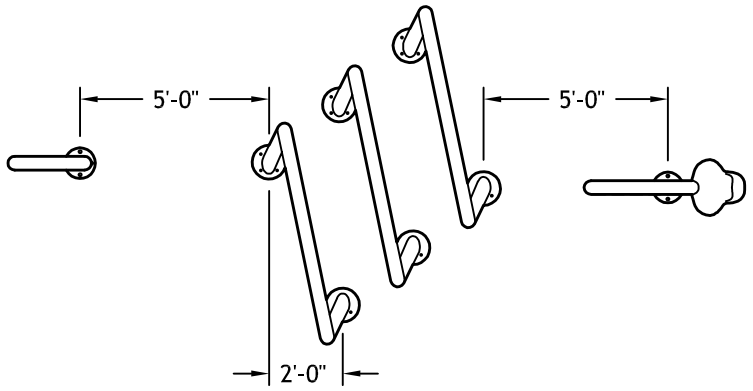

Hydraulic Requirements

☐ W066

GPM	psi
45	10

Specifications

Model Number: W066
Interactive Water Effect: Water Snake™ head shall discharge a flat narrow sheet of water, body loops flat spray effects, and a solid streams of water from the tail section.
Body: 4" diameter type 304 stainless steel pipe with machined type 304 base plate.
Head: High density molded foam with a stainless steel frame.
Anchor Bases: Type 304 stainless steel machined to mate with shaft base plate with grounding connection and 2" FPT inlet. Supplied with 4, ⅜" x 12" x 2" anchor bolts with two leveling nuts and washers per bolt and wood pour template.
Gaskets: 70 durometer EPDM o-ring.
Concrete Anchors: 18/8 stainless steel with stainless steel tamper-resistant fasteners.
Fasteners: Tamper-resistant 18/8 stainless steel.
Finish: Textured elastomeric urethane with a UV and chlorine resistant sealer coat.
Color: Green with themed head standard.
Nozzles: 18 stainless steel flat spray jets, 1 stainless steel precision jet, and 1 flat fan nozzle.

Optional Adders:

☐ **Wireless Activator Button (-SW)**
Transmitter: Solid state with encoded signal and integral omni-directional antenna.
Activator Power: 3 VDC lithium battery (CR2477).

☐ **Wired Activator Button (-ST)**
Activator Switch: 12 VDC.
Activator Cord: 150' of #18/2 type STOW, minimum 3/4" conduit recommended.

☐ **Hand Wheel (-HW):** Stainless steel coated with a heavy-duty aliphatic urethane.

☐ **Sound:** Speakers mounted in head; 40 Watt digital amplification system plays single and sequential sounds with audio stored on compact flash memory card; WDC interface.

Anchor Base "Head & Tail"

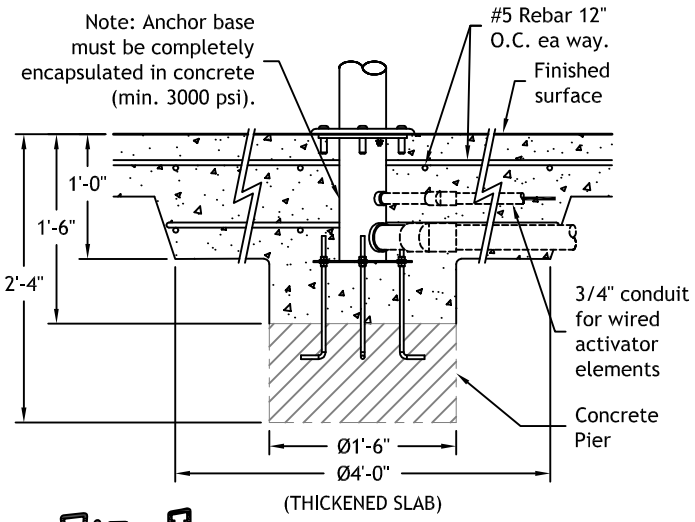

Anchor Base "Coils"

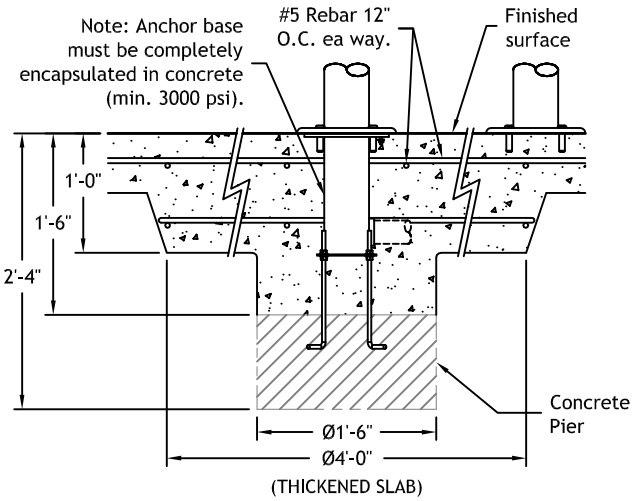

Water Snake™

W066

Fountain People, Inc. ~ PO Box 807 ~ 4600 Highway 123 ~ San Marcos, Texas 78667-0807
Phone (512) 392-1155 ~ Fax (512) 392-1154 ~ www.waterodyssey.com

06-20-13