Specifications

Model Number: W008
Interactive Water Effect: Shall be a gushing spray effect.
Shaft: 4" type 304 stainless steel pipe with a full radius bend and machined type 304 base plate.
Anchor Base: Type 304 stainless steel machined to mate with shaft base plate with grounding connection and 2" FPT inlet. Supplied with 4, ⅜" x 12" x 2" anchor bolts with two leveling nuts and washers per bolt and wood pour template.
Gasket: 70 durometer EPDM o-ring.
Finish: Textured elastomeric urethane with a UV and chlorine resistant sealer coat.
Color: (Specify red, dark blue, light blue, yellow, green, orange, or purple.)
Nozzle: Machined cast bronze full spray.

Optional Adders:

☐ **Wireless Activator Button (-SW)**
Transmitter: Solid state with encoded signal and integral omni-directional antenna.
Activator Power: 3 VDC lithium battery (CR2477).

☐ **Wired Activator Button (-ST)**
Activator Switch: 12 VDC.
Activator Cord: 150' of #18/2 type STOW, minimum 3/4" conduit recommended.

☐ **Hand Wheel (-HW):** Stainless steel coated with a heavy-duty aliphatic urethane.

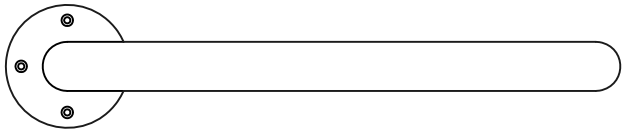

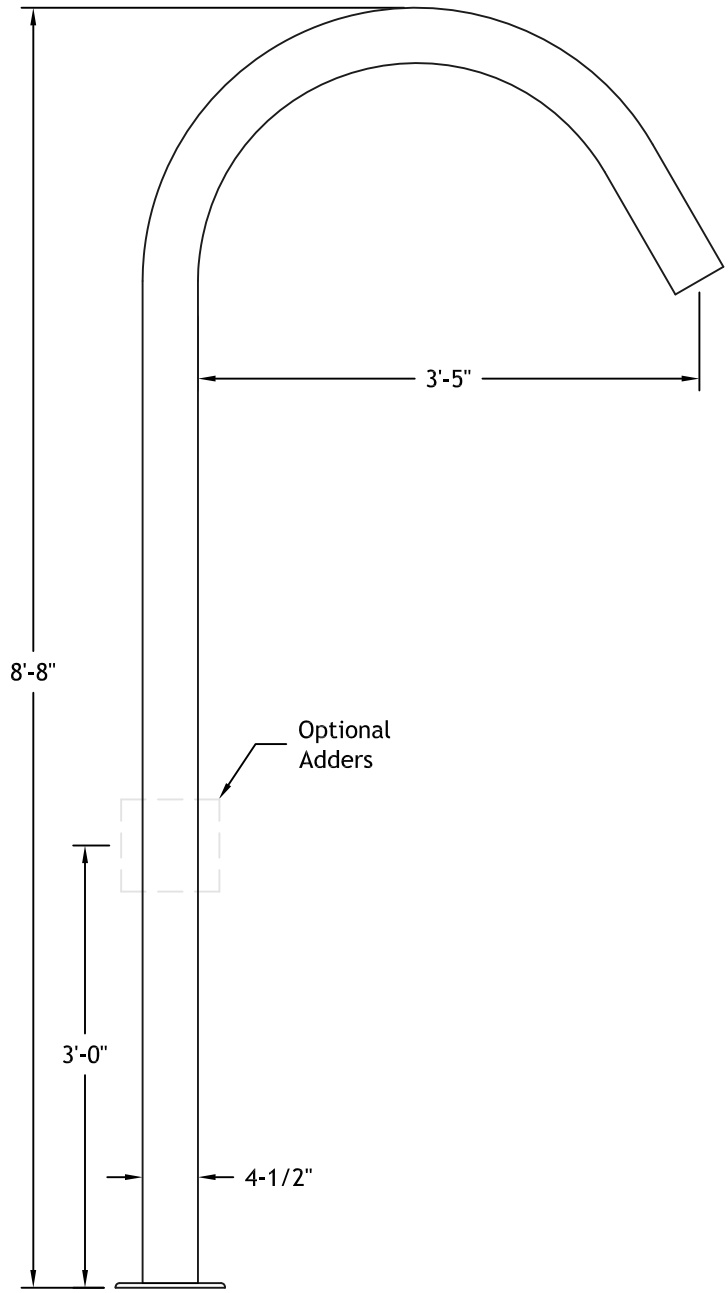

Anchor Base

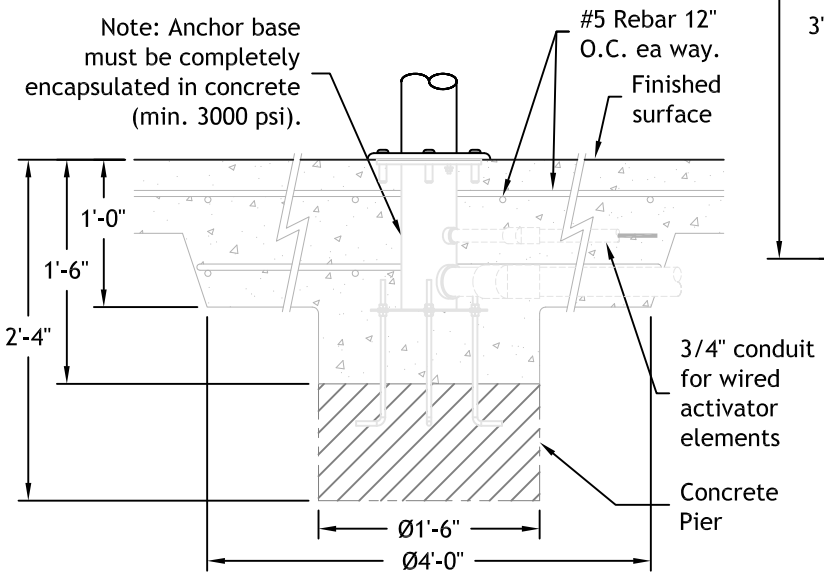

(THICKENED SLAB)

Hydraulic Requirements

☐ W008

GPM	psi
25-50	5-20

☐ *W008C - Water Conserving Version

*CGPM	*Cpsi
15-25	5-20

Step N' Whoosh™

W008

Fountain People, Inc. ~ PO Box 807 ~ 4600 Highway 123 ~ San Marcos, Texas 78667-0807
Phone (512) 392-1155 ~ Fax (512) 392-1154 ~ www.waterodyssey.com

06-25-13